THIS COPY IS PROVIDED ON A RESTRICTED BASIS AND IS NOT TO BE USED IN ANY WAY DETRIMENTAL TO THE INTERESTS OF PANDUIT CORP.

NOTES:

1. CAGE NUT EQUIPMENT RAIL STRIP KIT PART NUMBER: RGS134B-1
2. PACKAGING: 1 KIT PER BOX
3. ALL COMPONENTS THAT MAKE UP THIS KIT ARE RoHS COMPLIANT.

LISTED
GROUNDING AND BONDING EQUIPMENT

CERTIFIED

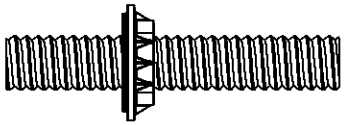

CAGE NUT BONDING STUD (QTY. 3)

#12-24 BONDING NUT(QTY. 8)

UNIVERSAL GROUNDING STICKER (QTY. 1)

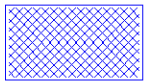

CLEANING PAD (QTY. 1)

5cc TUBE ANTI-OXIDANT PASTE (QTY. 1)

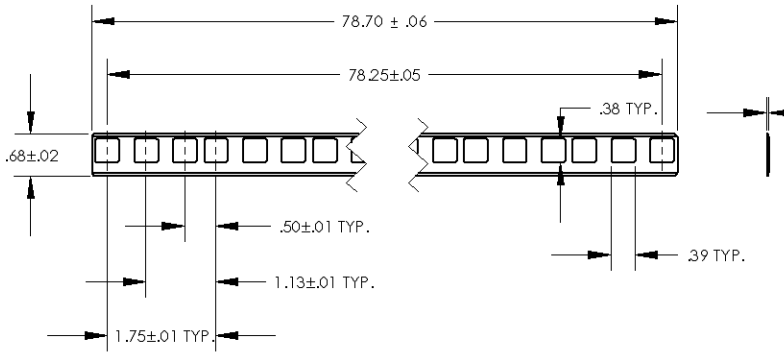

GROUNDING STRIP (QTY. 1)
45 RU (EIA SPACING)

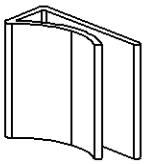

STRIP CLIP (QTY. 3)

C41668_03

REV	DATE	BY	CHK	DESCRIPTION	ECN	PM	CUST
03	9/08	JHNU	DWDA	ADDED SIDE VIEW FOR STRP, ADDED THICKNESS DIMENSION			
02	8/07	JHNU	DWDA	REVISED DRAWING TITLE & NOTE #1: REMOVED 4 POST RACK FROM TITLE REVISED OVERALL LENGTH OF STRIP: 78.70 WAS 78.75			
01	7/07	JHNU	DWDA	REVISED GROUNDING STRIP TO SQUARLE HOLE DESIGN			
00	6/06	JHNU	JMAR	DRAWING RELEASED	PC00466		

PANDUIT CORP. TINLEY PARK, ILLINOIS

CAGE NUT EQUIPMENT RAIL STRIP KIT
(RGS134B-1)
CUSTOMER DRAWING

UNLESS OTHERWISE SPECIFIED DIMENSIONAL TOLERANCES ARE:
(.X) ± (.XXX) ±
(.XX) ± ANGLES ±

UNLESS OTHERWISE SPECIFIED, ALL DIMENSIONS ARE GIVEN IN INCHES, THIRD ANGLE PROJECTION

DRAWN BY: JHNU
DATE: 6/06
CHK'D:
MAT'L:
SCALE: NONE
DRAWING NO / CAD FILE: C41668
DWG SIZE: B