THIS COPY IS PROVIDED ON A RESTRICTED BASIS AND IS NOT TO BE USED IN ANY WAY DETRIMENTAL TO THE INTERESTS OF PANDUIT CORP.

PART NUMBER	SEE DETAIL	"A" ±.062	B"	MARKER ACROSS	TUBING COLOR	SEE STYLE
H050X044H1T	C	0.50 [12.70]	.75 [19.1]	4	WHITE	A
H075X044H1T	B	0.75 [19.05]	1.00 [25.4]	2		
H100X044H1T	B	1.00 [25.40]	.75 [19.1]	2		
H150X044H1T	A	1.50 [38.10]	1.00 [25.4]	1		
H200X044H1T	A	2.00 [50.80]	.75 [19.1]	1		
H050X044H2T	C	0.50 [12.70]	.75 [19.1]	4	YELLOW	A
H100X044H2T	B	1.00 [25.40]	.75 [19.1]	2		
H200X044H2T	A	2.00 [50.80]	.75 [19.1]	1		
H050X044H3T	C	0.50 [12.70]	.75 [19.1]	4	BLACK	A
H075X044H3T	B	0.75 [19.05]	1.00 [25.4]	2		
H100X044H3T	B	1.00 [25.40]	.75 [19.1]	2		
H150X044H3T	A	1.50 [38.10]	1.00 [25.4]	1		
H200X044H3T	A	2.00 [50.80]	.75 [19.1]	2		
H050X044H4T	C	0.50 [12.70]	.75 [19.1]	4	RED	A
H075X044H4T	B	0.75 [19.05]	1.00 [25.4]	2		
H100X044H4T	B	1.00 [25.40]	.75 [19.1]	2		
H150X044H4T	A	1.50 [38.10]	1.00 [25.4]	1		
H200X044H4T	A	2.00 [50.80]	.75 [19.1]	2		
H050X044H1T-B	C	0.50 [12.70]	.75 [19.1]	4	WHITE	B
H075X044H1T-B	B	0.75 [19.05]	1.00 [25.4]	2		
H100X044H1T-B	B	1.00 [25.40]	.75 [19.1]	2		
H150X044H1T-B	A	1.50 [38.10]	1.00 [25.4]	1		
H200X044H1T-B	A	2.00 [50.80]	.75 [19.1]	1		
H100X044H2T-B	B	1.00 [25.40]	.75 [19.1]	2	YELLOW	B

NOTES:
1. DIMENSIONS IN [ ] ARE IN MILLIMETERS.

STYLE A

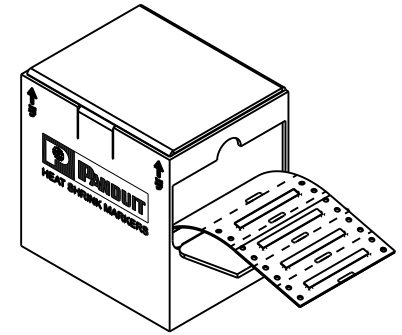

STYLE B

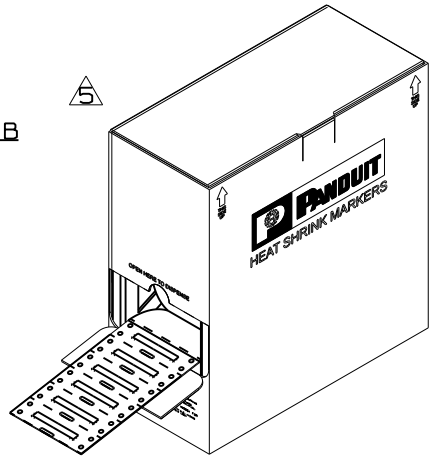

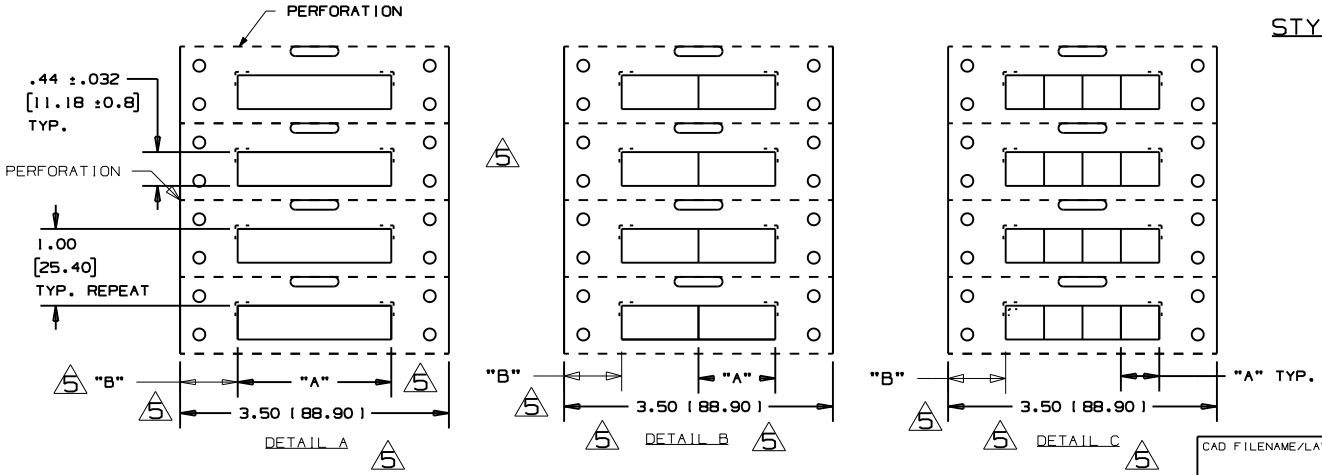

REV	DATE	BY	CHK	DESCRIPTION	ECN	R	CUST	SUP
5	5/21/09	RVU		+/-.12, +/-.062, +/-.020 WAS +/-.03, +/-.032, +/-.010. HT: .335 +/-.032 WAS .335. MAT'L, HSK TUBING GMUHS31, 3.5 LINER WAS GMUHS. ADD "A" +/-.062. ADD STYLE B VIEW FOR BULK BOX. ADD H100X044H2T-B ON TABLE. VIEWS UPDATE.	5593			
4				VOID		R		
3	10-19-07	RVU		ADDED NEW P/N: H050X044H4T, H075X044H4T, H100X044H4T, H150X044H4T AND H200X044H4T.	5183	R		
2	9-4-07	RVU		ADDED NEW P/N: H050X044H3T, H075X044H3T H100X044H3T AND H150X044H3T.	5125	R		
1	1-31-07	RVU		REVISED VIEW OF BOX, AND TOL. ADDED NOTES 1 & 2.	4859	R		
0	8-1-06	RVU		DRAWING RELEASE	4613	R		

CAD FILENAME/LAYERS: 100923NH_DC_C10434/01F

PANDUIT CORP. TINLEY PARK, ILLINOIS

CUSTOMER DRAWING H***X044H** OPTIMUM COMPUTER PRINTABLE MIL. SPEC. HEAT SHRINK MARKERS

UNLESS OTHERWISE SPECIFIED, DIMENSIONAL TOLERANCES ARE:
(.X) ± .12 (.XXX) ± .020
(.XX) ± .062 ANGLES ±

UNLESS OTHERWISE SPECIFIED, ALL DIMENSIONS ARE GIVEN IN INCHES, THIRD ANGLE PROJECTION.

DRAWN BY: RVU
DATE: 8-1-06
CHK'D:

MAT'L: HEATSHRINK TUBING GMUHS31, 3.5 WIDE LINER

SCALE: NTS
DRAWING NO.: C10434
DWG SIZE: A