THIS COPY IS PROVIDED ON A RESTRICTED BASIS AND IS NOT TO BE USED IN ANY WAY DETRIMENTAL TO THE INTERESTS OF PANDUIT CORP.

PANDUIT P/N	WEIGHT
UICBX2**-A	.75 LB/10 PCS (341.6 g/10 PCS)

COVER REMOVED FOR CLARITY

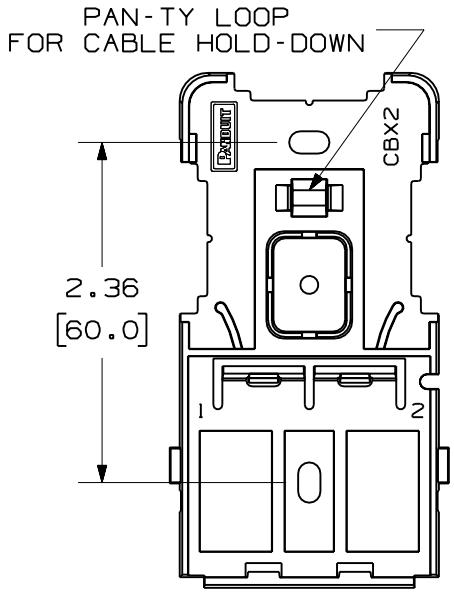

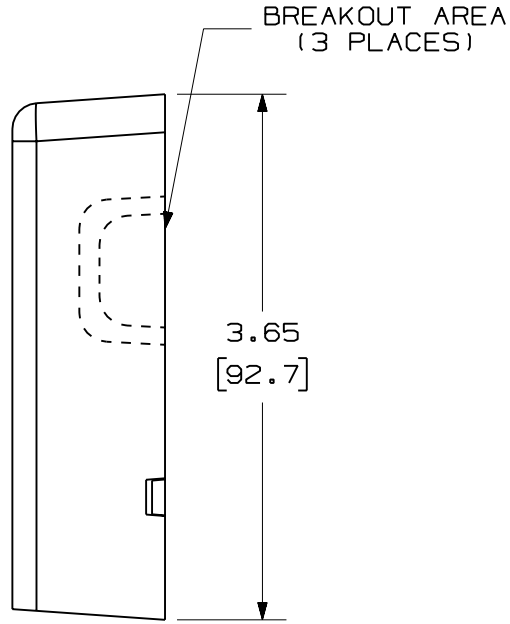

NOTES:
1. SEE CURRENT CATALOG FOR ADDITIONAL PART NUMBER SUFFIXES TO INDICATE COLOR AND OR PACKAGE QUANTITY.
2. SEE CATALOG FOR A COMPLETE LIST OF PARTS APPLICABLE FOR USE WITH THIS PART.
3. DIMENSIONS IN PARENTHESES ARE IN METRIC.
4. ALSO INCLUDED WITH BOX:
   - 1- BOX BASE
   - 1- BOX COVER
   - 2- MOUNTING SCREW
   - 2- STRIP OF 1.25" X .75" FOAM TAPE FOR MOUNTING
   - 1- COLOR COORDINATED LABEL/SCREW COVER
   - 1- CLEAR LABEL/SCREW COVER
   - 1- COLOR COORDINATED LABEL COVER
   - 1- CLEAR LABEL COVER
   - 1- CABLE TIE (PLT1.5I-C)
5. BASE HAS ONE POCKET FOR OPTIONAL MAGNET (CBM-X)
6. BREAKOUTS DESIGNED TO ACCEPT LD3 OR LD5 SERIES RACEWAY.

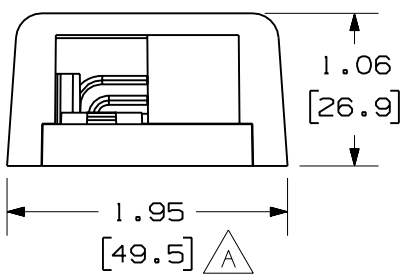

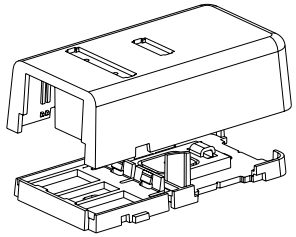

NO WARRANTY, EXPRESSED OR IMPLIED, IS MADE BY PANDUIT WITH RESPECT TO ADHESIVE BOND PERFORMANCE. AMONG OTHER THINGS, THE CONDITIONS UNDER WHICH THESE MOUNTS MAY BE APPLIED AND/OR THE SURFACE TO WHICH THEY MAY BE APPLIED ARE BEYOND PANDUIT'S CONTROL.

MODEL FILENAME: M01700AR_UICBX2_04.PRT
DRAWING FILENAME: M01700AR_DC_04B.PRT
SIZE: A

MINI-COM ULTIMATE ID
2 POSITION SURFACE MOUNT BOX
CUSTOMER DRAWING

PANDUIT™ CORP.
TINLEY PARK, ILL 60477

THIRD ANGLE PROJECTION

ALL DIMENSIONS ARE GIVEN IN INCHES, UNLESS OTHERWISE SPECIFIED.
DIMENSIONAL TOLERANCES ARE:
(.X) ± (.XXX) ±.010(.3)
(.XX) ±.03(.8) ANGLES ±

DRAWN BY: JsP
DATE: 9-19-06
CHK'D:
MATERIAL: ABS

I.I. NUMBER: N/A
PRODUCT SPEC: N/A
WORK INSTRUCTION: N/A
SCALE: NONE
PART NO.: UICBX2**-A
DRAWING NO.: 01700-08

REV	DATE	BY	CHK	DESCRIPTION	ECN	-	R	CUST	SUP	OTH
1	10-26-06	JsP		A. ADDED WIDTH DIMENSION.	01700-08					
R	9-19-06	JsP	EB	RELEASED TO PRODUCTION	01700-08	EB	EB		EB	