THIS COPY IS PROVIDED ON A RESTRICTED BASIS AND IS NOT TO BE USED IN ANY WAY DETRIMENTAL TO THE INTERESTS OF PANDUIT CORP.

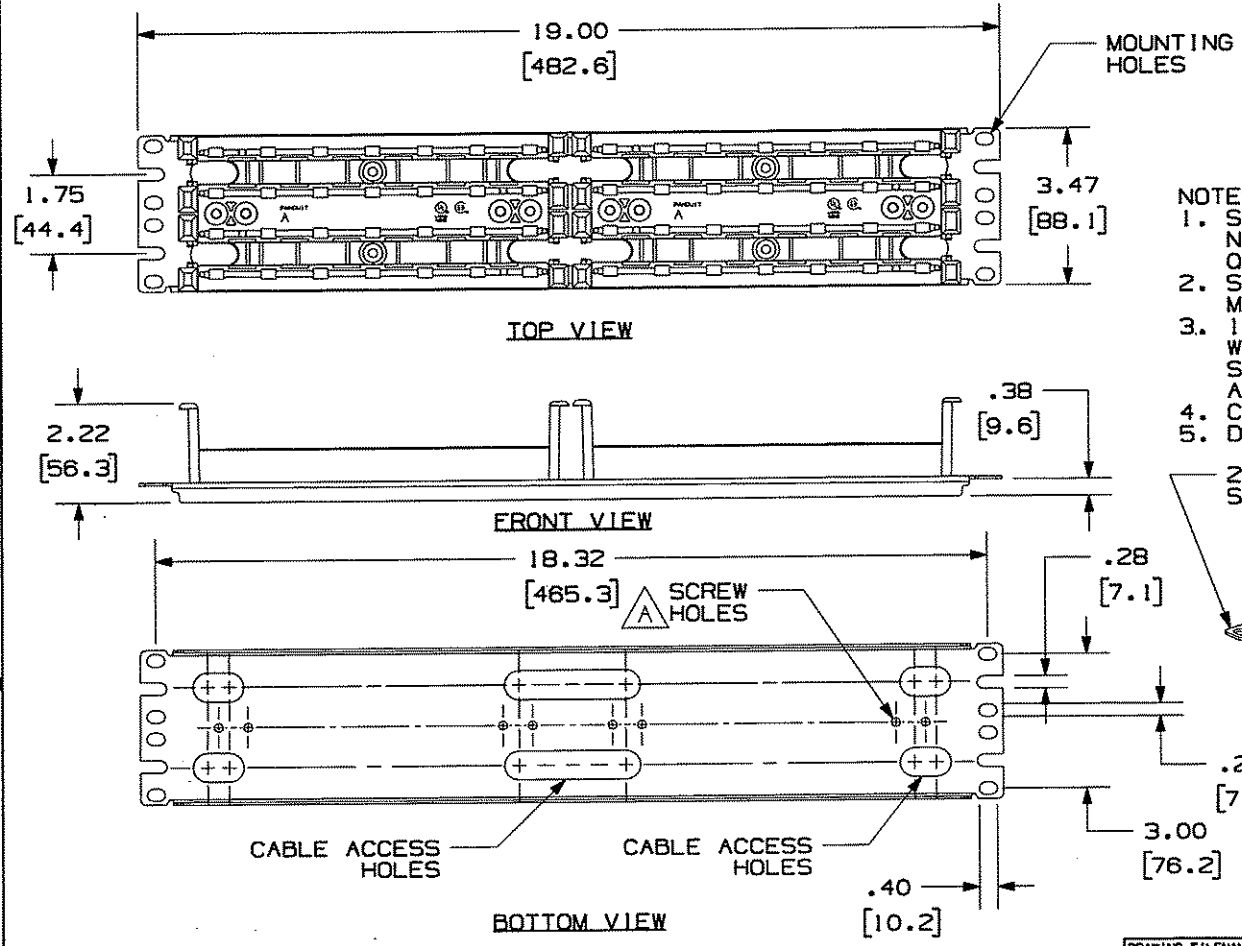

PANDUIT PART NO.	WEIGHT
P110B100R2Y	2.01 LB/ea (923 g/ea)

NOTES:
1. SEE CURRENT CATALOG FOR ADDITIONAL PART NUMBER SUFFIXES TO INDICATE PACKAGE QUANTITY.
2. STAMPING ASSEMBLY IS DESIGNED FOR RACK MOUNT APPLICATIONS.
3. 110 BASES ARE ASSEMBLED TO BRACKETS WITH SUPPLIED SCREWS. (4) #12 MOUNTING SCREWS AND (4) METRIC M6x1x15MM SCREWS ARE ALSO PROVIDED.
4. CONNECTING BLOCKS SOLD SEPARATELY.
5. DIMENSIONS IN PARENTHESES ARE IN METRIC.

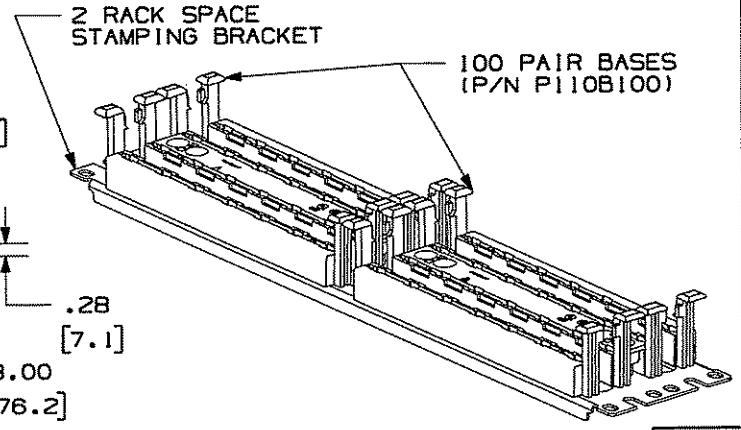

REV	DATE	BY	CHK	DESCRIPTION	ECN - R	CUST	SUP	OTH
R	3-24-06	NER		RELEASED TO PRODUCTION	02479-342			

DRAWING FILENAME: M02479NC_DC342_00A.PRT

SIZE: A

TITLE: TWO RACK SPACE 110 STAMPING ASSEMBLY CUSTOMER DRAWING

PANDUIT™ CORP.
TINLEY PARK, ILL 60477

THIRD ANGLE PROJECTION

ALL DIMENSIONS ARE GIVEN IN INCHES, UNLESS OTHERWISE SPECIFIED.
DIMENSIONAL TOLERANCES ARE:
(.X) ± (.XXX) ±
(.XX) ± ANGLES ±

DRAWN BY: NER
DATE: 3-24-06
CHK'D:

REVIEW DRAWING NUMBERS: 110 BASES (ABS) BRACKET (C.R.S. 16 GAUGE)

I.I. NUMBER:
PRODUCT SPEC:
WORK INSTRUCTION:
SCALE: NONE
PART NO.: P110B100R2Y
DRAWING NO.: 02479-342