THIS COPY IS PROVIDED ON A RESTRICTED BASIS AND IS NOT TO BE USED IN ANY WAY DETRIMENTAL TO THE INTERESTS OF PANDUIT CORP.

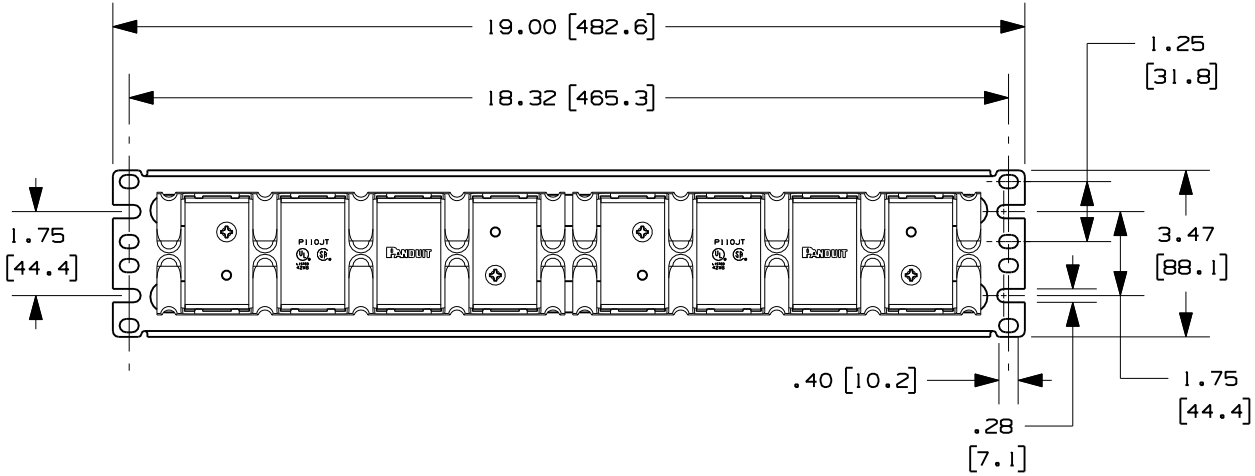


NOTES:
1. STAMPING ASSEMBLY IS DESIGNED FOR RACK MOUNT APPLICATIONS.
2. JUMPER TROUGHS ARE PRE-ASSEMBLED TO PANELS. (4) #12-24 X .5 AND (4) METRIC M6x1x15MM SCREWS ARE ALSO PROVIDED FOR RACK MOUNTING.
3. DIMENSIONS IN BRACKETS ARE IN METRIC.

| PANDUIT PART NO. | WEIGHT |
|---|---|
| P110JTR2Y | 1.5 LB/ea (680.4g/ea) |

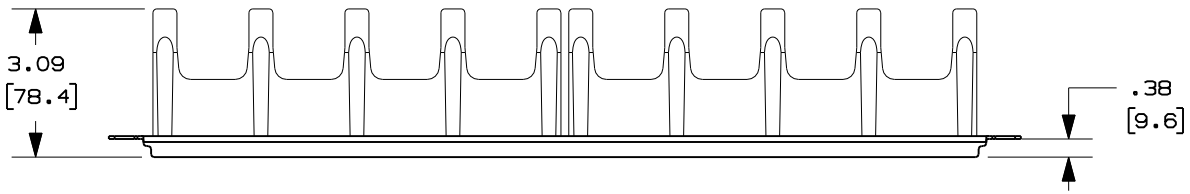


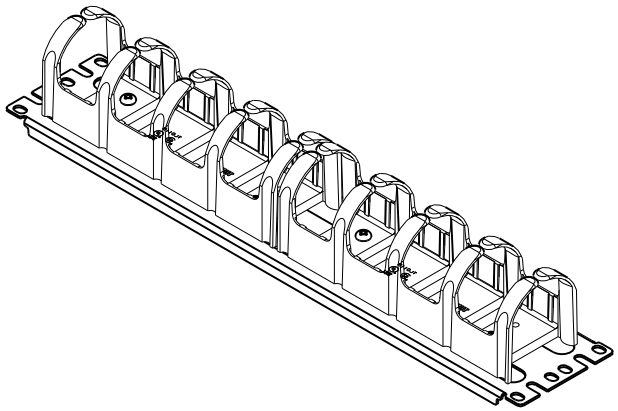

| | | | | | | | | | |
|---|---|---|---|---|---|---|---|---|---|
| R | 5-29-07 | MDJr | | RELEASED TO PRODUCTION | 02749-375 | | | | |
| REV | DATE | BY | CHK | DESCRIPTION | ECN - R | CUST | SUP | OTH | |

MODEL FILENAME: M01797AB_2RU_TROUGH_ASSY_00

DRAWING FILENAME: M02479PM_DC375_00A

SIZE: A

TWO RACK SPACE JUMPER TROUGH
19" RACK MOUNT PANEL
CUSTOMER DRAWING

PANDUIT™ CORP.
TINLEY PARK, ILL 60477

THIRD ANGLE PROJECTION

ALL DIMENSIONS ARE GIVEN IN INCHES, UNLESS OTHERWISE SPECIFIED.
DIMENSIONAL TOLERANCES ARE:
(.X) ± (.XXX) ±.010(.3)
(.XX) ±.03(.8) ANGLES ±

DRAWN BY: LZ
DATE: 9-30-03
CHK'D:

REVIEW DRAWING NUMBERS:

MAT'L: JUMPER TROUGH (PC)
BRACKET (C.R.S. 16 GAUGE)

I.I. NUMBER:
PRODUCT SPEC:
WORK INSTRUCTION:
SCALE: NONE
PART NO.: SEE CHART
DRAWING NO.: 02479-375