Search Results

Evaluate
- FAQ's
Design a Solution
- Catalog Cut Sheet
- PDF GPQC07-1/0 P
- Part Drawings
- PDF Access Floor ..
- Specification Sheets
- PDF Access Floor ..
How to Buy
- Bill of Material
- Favorite Products List
- Locate Distributor
Install & Maintain
- Installation Instructions
- PDF Access Floor ..

Current refinements (click ☒ to remove) Search Tips

☒ **Text Search: 'GPQC12-1/0'**

Your search criteria matched only one product, shown below

GPQC12-1/0

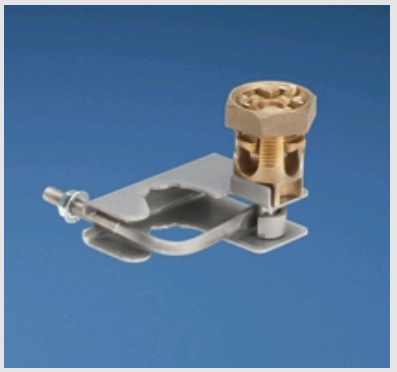

- Bond mesh common bonding network (MCBN) conductors to each other and bond the access floor pedestals to the conductors
- Specifically designed to bond perpendicular MCBN conductors per TIA -942 and TIA-607-B
- Bond to the pedestal with a single bolt to simplify installation
- Accommodate conductors from #6 – 1/0 AWG, minimizes inventory requirements
- Bond round and square access floor pedestals for greater flexibility

Part Number	GPQC121/0
RoHS Compliancy Status	Compliant
Part Description	Access floor grounding clamp for 1 1/4" round pedestals.
Depth (In.)	4.53
Depth (mm)	115.1
Height (In.)	3.19
Height (mm)	81.0
Width (In.)	3.44
Width (mm)	87.4
CE Compliant	No
Pricing Description	Access Floor Grounding Clamp, 1 1/4" (31.8mm) Round
Round Pedestal (In.)	1 1/4
Round Pedestal (mm)	31.8
Square Pedestal (In.)	—
Square Pedestal (mm)	—
Tightening Torque Clamp	150
Tightening Torque Conductor	385
Min. Order UOM	KT
Min. Order Qty.	1
MCBN Conductor Size Range (mm²)	16 – 50
BOM Qty. (# of Pkgs.)	0
Add to Favorite Product List	e

Please register to utilize the 'Bill of Materials', 'Submit Quotes' and 'Favorite Product List' features.

Copyright © 1995-2011, PANDUIT CORP. All rights reserved. | Legal Information | Privacy Policy