onlinecomponents.com
THE ONLINE DISTRIBUTOR OF ELECTRONIC COMPONENTS

Switchcraft

ONLINE CATALOG

SWITCHCRAFT, INC. 5555 N. Elston Ave.
Chicago, IL 60630 • 773 792-2700 • FAX: 773 792-2129
www.switchcraft.com

1/4" EXTENSION JACKS (in-line) and 1/4" SPEAKER JACKS

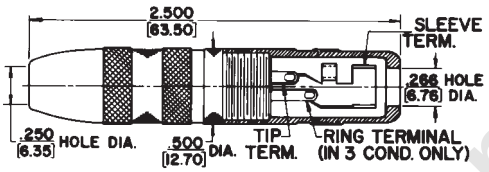

121, 131

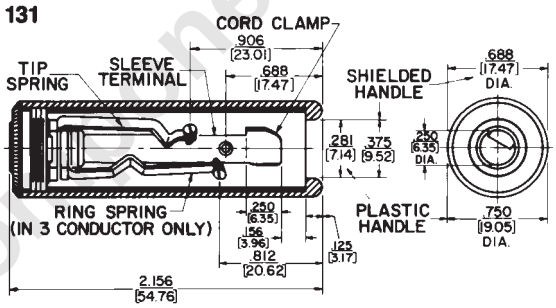

830, 1230

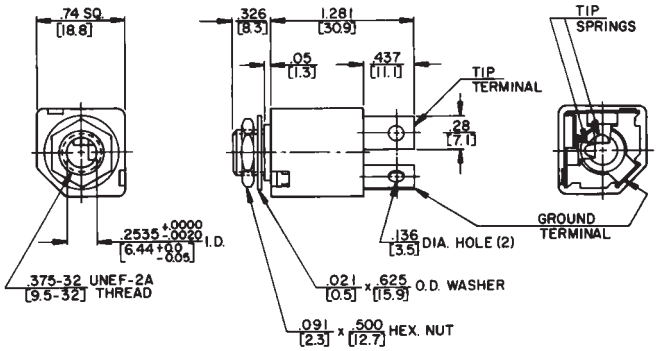

DIMENSIONS ARE FOR REFERENCE ONLY Inch / (mm)

onlinecomponents.com