POLES	COIL VAC	FLA	RES	TERMINATION	COVER	INDIVIDUAL BOX	COIL DATA
1	120VAC 50/60Hz	20	30	#10-32 COMBINATION SCREWS 4 Quick Connect Power Termination	YES	YES	COIL 120VAC 50/60Hz 467 OHM 90 VAC OPERATE 19.2-81.6 VAC DROPOUT 30.8 VA INRUSH 5.4 VA SEAL MAX VOLTAGE 132 VAC

NOTES: UNLESS OTHERWISE SPECIFIED

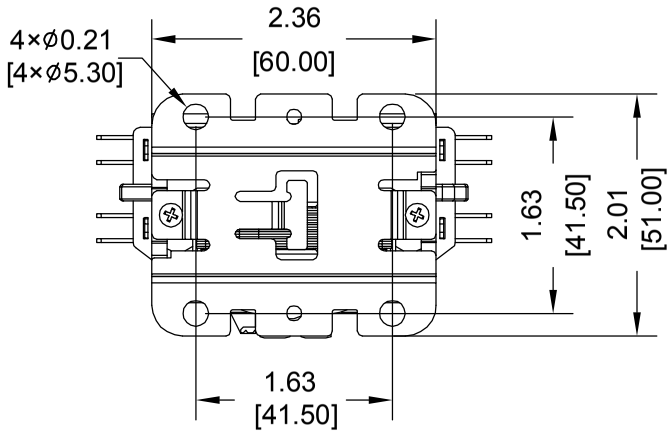

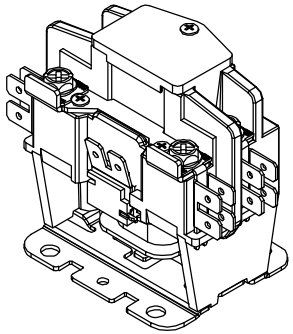

STANCOR
1000144-163
1P-20A-120V
COIL
120VAC 50/60Hz
B WWYY
Made in China
E246810
DP1T20

VAC	FLA	LRA
240/277	20	120
480	20	100
600	20	80

RES AMPS 30
Herm.refrig.comp.
HCDPY112020AA
Torque for CU 75°C: screws 20 in lbs / lugs 40 in lbs

T1 L1 T2 L2

Product Label

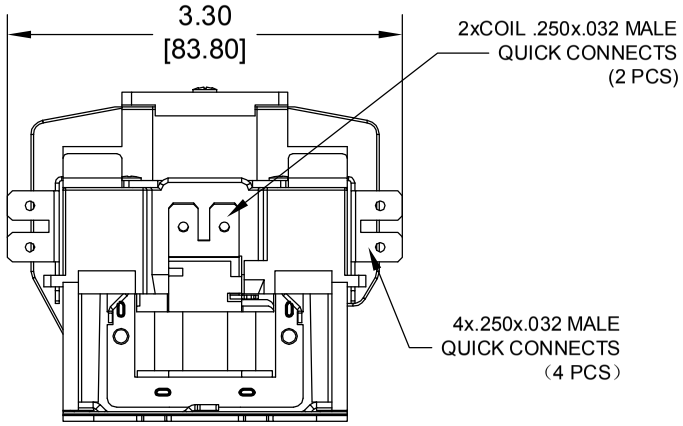

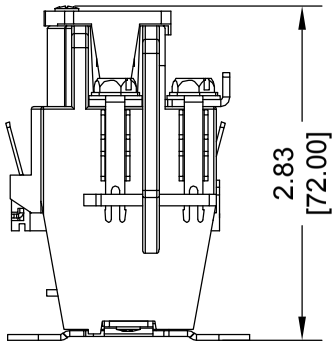

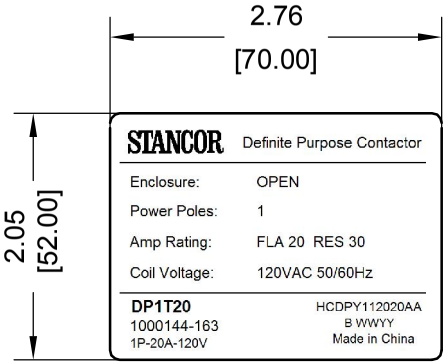

Individual Box Label

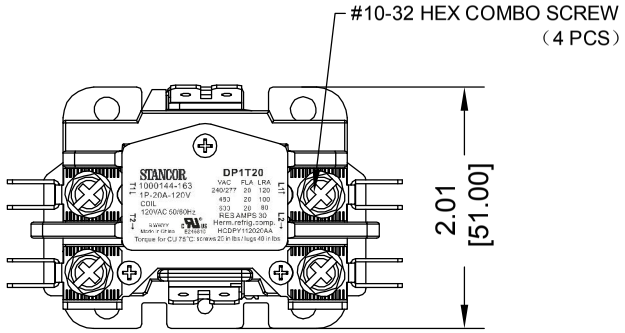

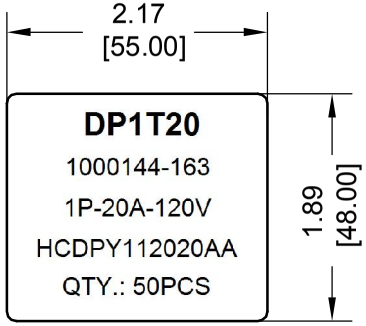

Master Carton Label

TOLERANCE	
INCHES [mm]	
X	±0.06 [1.50]
X.X	±0.02 [.50]
X.XX	±0.006 [.150]
X.XXX	±0.002 [.050]
ANGLES	±1°

THIRD ANGLE PROJECTION

REV.	DESCRIPTION	ECN	DWN	APVD	APVD DATE

STANCOR
www.stancor.com
2425 South 21st Street
Phoenix，AZ 85034
(602)275-3800

DRAWN BY	DRAWN DATE	CHECKED BY	CHECKED DATE

DESC. 1P-20A-120V

PAGE 1 OF 1

PART NO. DP1T20