| POLES | COIL VAC | FLA | RES | TERMINATION | COVER | INDIVIDUAL BOX | COIL DATA |
|---|---|---|---|---|---|---|---|
| 1 | 208/240VAC 50/60Hz | 20 | 30 | #10-32 COMBINATION SCREWS 4 Quick Connect Power Termination | YES | YES | COIL 208/240VAC 50/60Hz<br>1868 OHM 180 VAC OPERATE<br>38.4-163 VAC DROPOUT<br>26.8 VA INRUSH 5.4 VA SEAL<br>MAX VOLTAGE 264 VAC |

**NOTES:** UNLESS OTHERWISE SPECIFIED

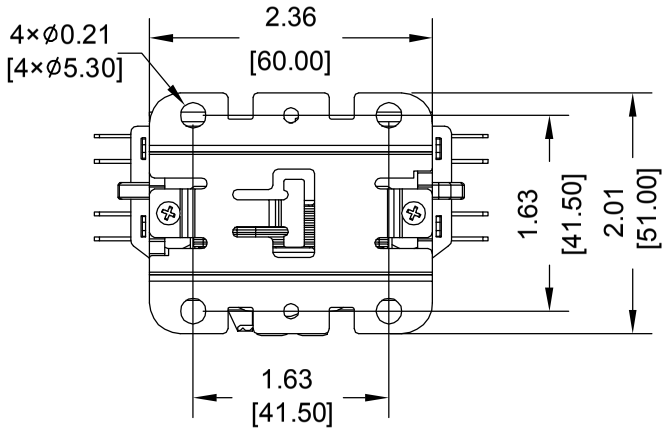


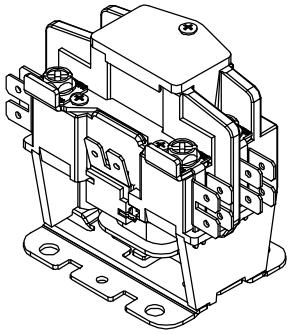

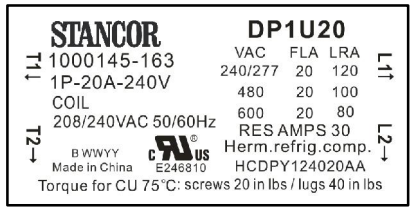


Product Label

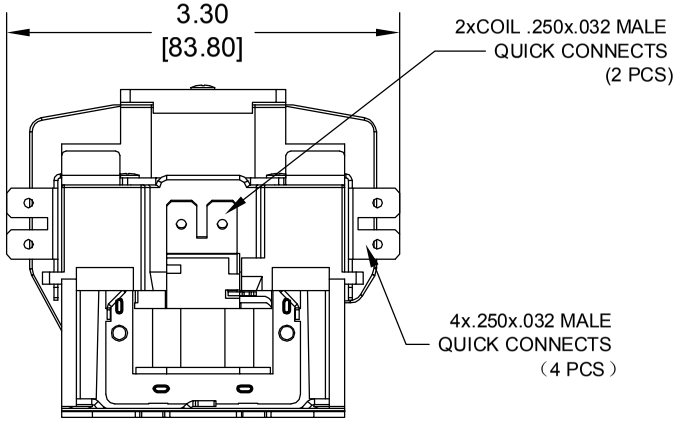


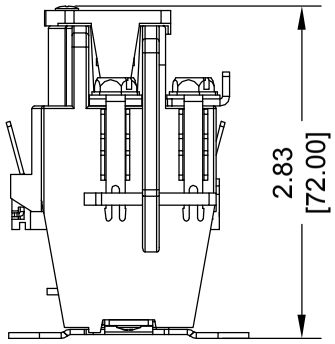


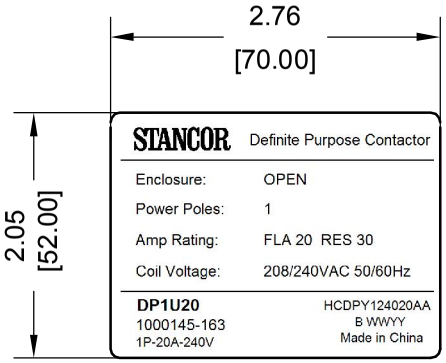


Individual Box Label

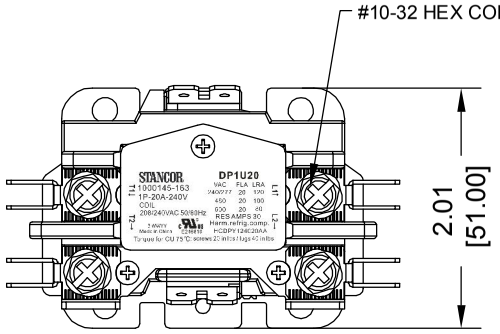


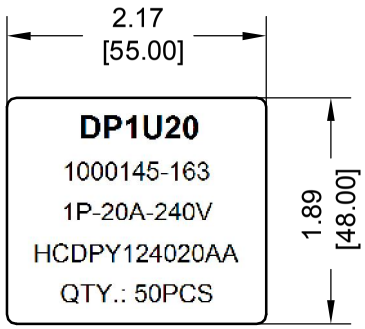


Master Carton Label

| TOLERANCE | |
|---|---|
| INCHES [mm] | |
| X | ±0.06 [1.50] |
| X.X | ±0.02 [.50] |
| X.XX | ±0.006 [.150] |
| X.XXX | ±0.002 [.050] |
| ANGLES | ±1° |

THIRD ANGLE PROJECTION

| REV. | DESCRIPTION | ECN | DWN | APVD | APVD DATE |
|---|---|---|---|---|---|
| | | | | | |


STANCOR
www.stancor.com
2425 South 21st Street
Phoenix，AZ 85034
(602)275-3800


| DRAWN BY | DRAWN DATE | CHECKED BY | CHECKED DATE |
|---|---|---|---|
| | | | |

DESC. 1P-20A-240V

PAGE 1 OF 1

PART NO. DP1U20