POLES	COIL VAC	FLA	RES	TERMINATION	COVER	INDIVIDUAL BOX	COIL DATA
3	120VAC 50/60Hz	25	35	#10-32 Binding Head Screws 2 Quick Connect Power Termination	YES	YES	COIL 120VAC 50/60Hz 120 OHM 90 VAC OPERATE 19.2-81.6 VAC DROPOUT 120 VA INRUSH 21 VA SEAL MAX VOLTAGE 132 VAC

NOTES: UNLESS OTHERWISE SPECIFIED

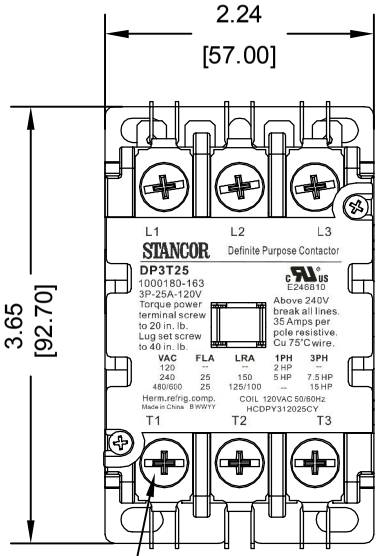

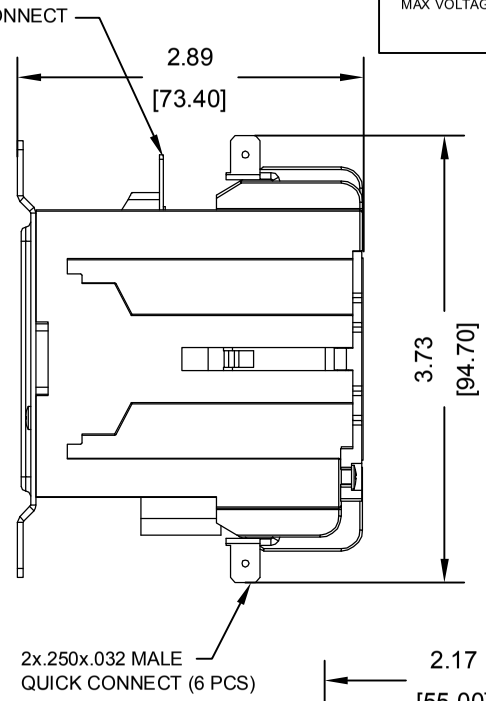

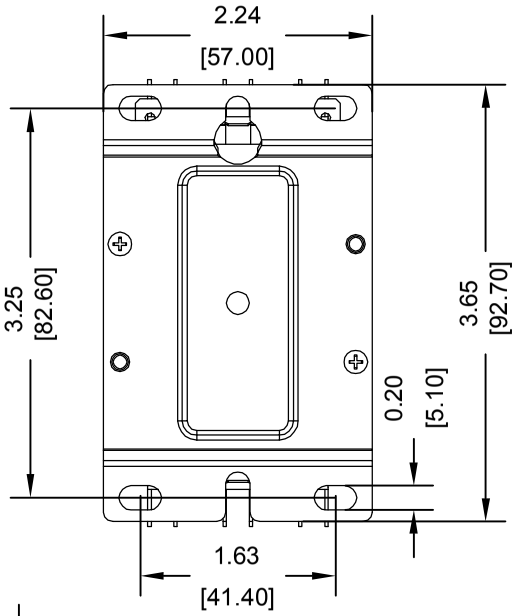

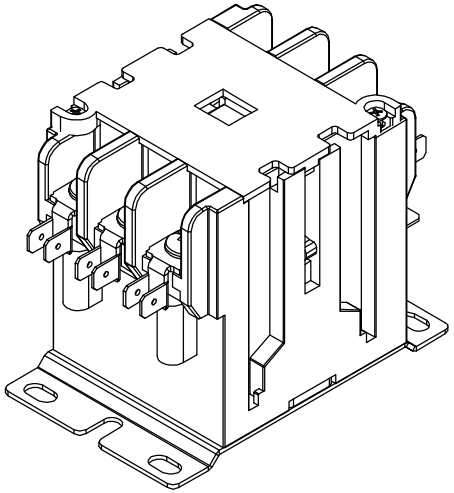

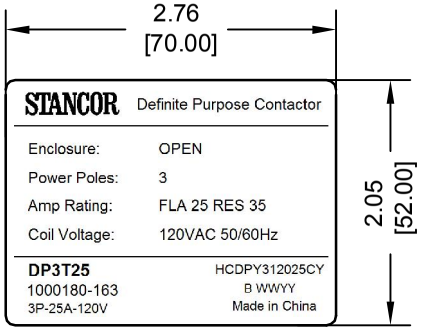

Individual Box Label

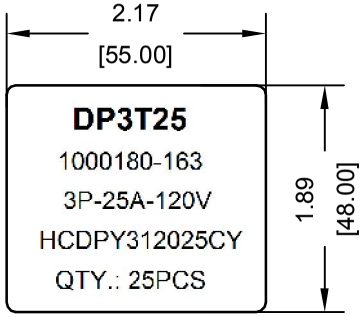

Master Carton Label

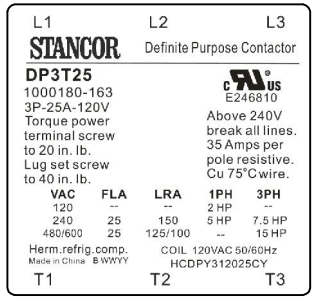

Product Label

TOLERANCE	
INCHES [mm]	
X	±0.06 [1.50]
X.X	±0.02 [.50]
X.XX	±0.006 [.150]
X.XXX	±0.002 [.050]
ANGLES	±1°

THIRD ANGLE PROJECTION

REV.	DESCRIPTION	ECN	DWN	APVD	APVD DATE

STANCOR
www.stancor.com
2425 South 21st Street
Phoenix，AZ 85034
(602)275-3800

DRAWN BY	DRAWN DATE	CHECKED BY	CHECKED DATE

DESC. 3P-25A-120V

PAGE 1 OF 1

PART NO. DP3T25