POLES	COIL VAC	FLA	RES	TERMINATION	COVER	INDIVIDUAL BOX	COIL DATA
3	208/240VAC 50/60Hz	40	50	#14-2 COMPRESSION TERMINALS 2 Quick Connect Power Termination	YES	YES	COIL 208/240VAC 50/60Hz 480 OHM 180 VAC OPERATE 38.4-163 VAC DROPOUT 104.5 VA INRUSH 21 VA SEAL MAX VOLTAGE 264 VAC

NOTES: UNLESS OTHERWISE SPECIFIED

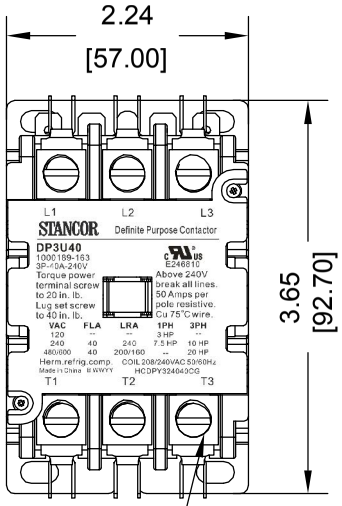

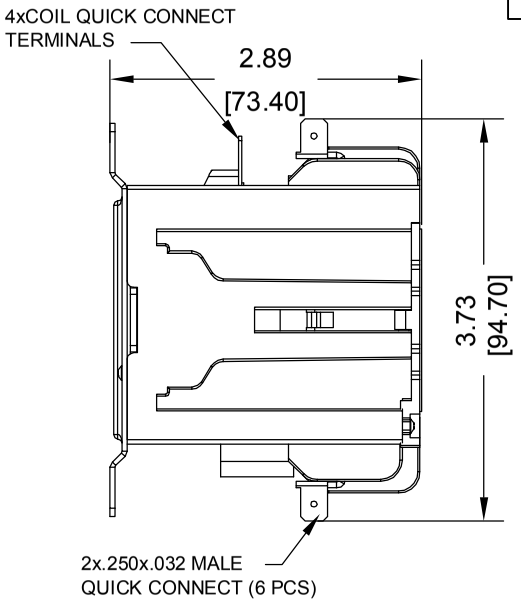

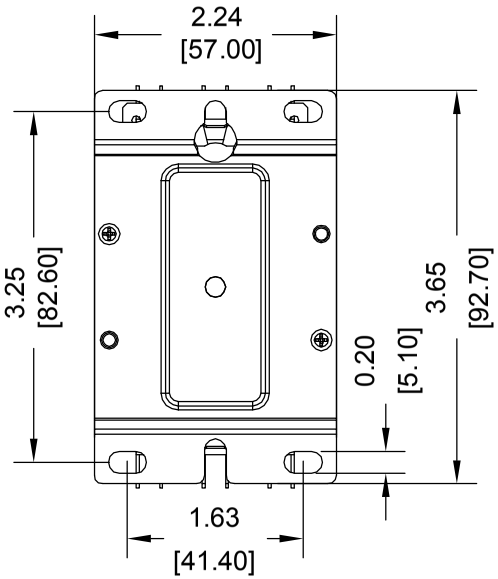

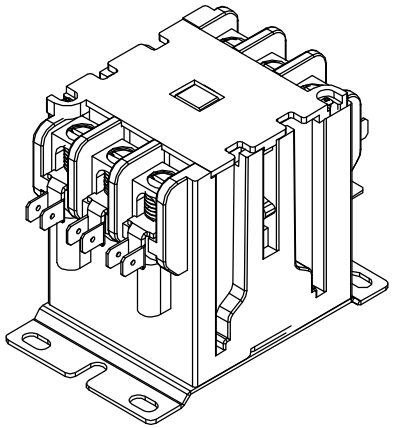

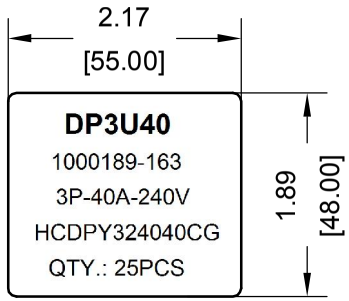

Master Carton Label

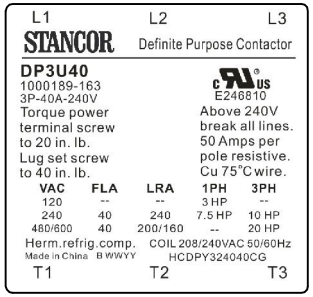

Product Label

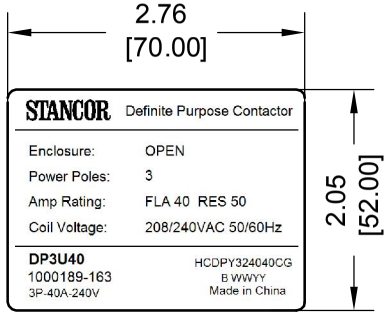

Individual Box Label

TOLERANCE	
INCHES [mm]	
X	±0.06 [1.50]
X.X	±0.02 [.50]
X.XX	±0.006 [.150]
X.XXX	±0.002 [.050]
ANGLES	±1°

THIRD ANGLE PROJECTION

REV.	DESCRIPTION	ECN	DWN	APVD	APVD DATE

STANCOR
www.stancor.com
2425 South 21st Street
Phoenix, AZ 85034
(602)275-3800

DRAWN BY	DRAWN DATE	CHECKED BY	CHECKED DATE

DESC. 3P-40A-240V

PAGE 1 OF 1

PART NO. DP3U40