POLES	COIL VAC	FLA	RES	TERMINATION	COVER	INDIVIDUAL BOX	COIL DATA
3	277VAC 50/60Hz	25	35	#10-32 Binding Head Screws 2 Quick Connect Power Termination	YES	YES	COIL 277VAC 50/60Hz 639 OHM 208 VAC OPERATE 44.3-188.3 VAC DROPOUT 120 VA INRUSH 21 VA SEAL MAX VOLTAGE 304.7 VAC

NOTES: UNLESS OTHERWISE SPECIFIED

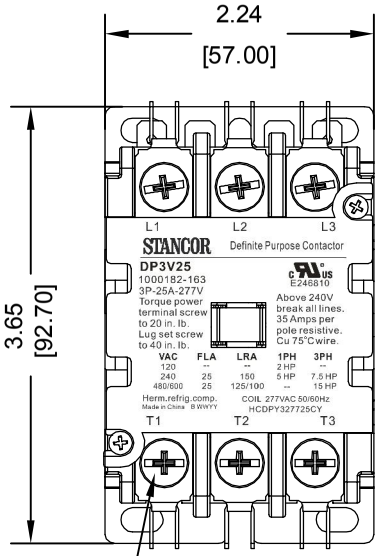

#10-32 BINDING HEAD SCREWS
（6 PCS）

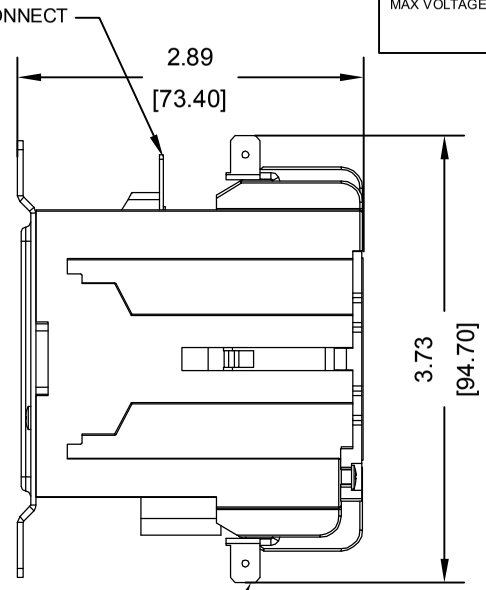

2x.250x.032 MALE
QUICK CONNECT (6 PCS)

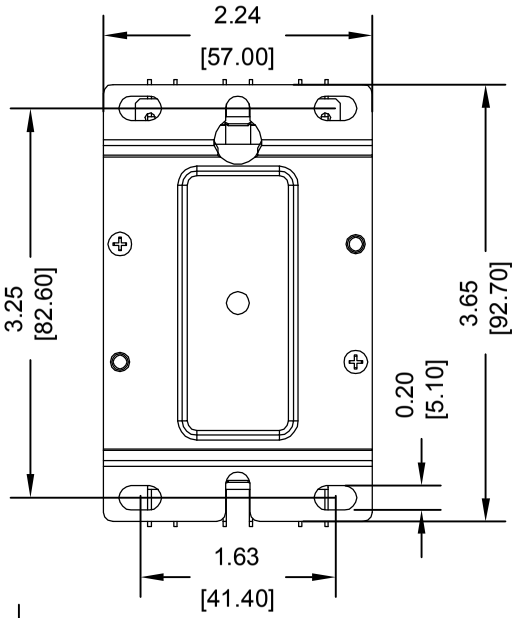

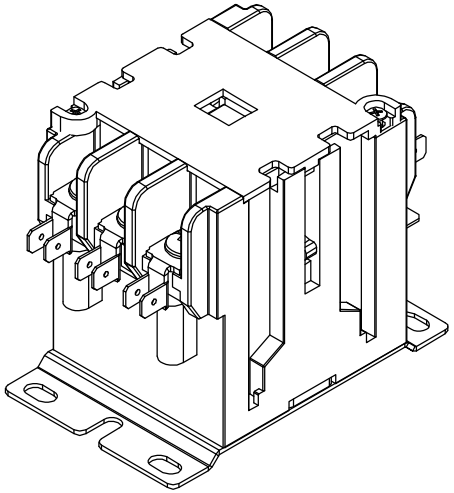

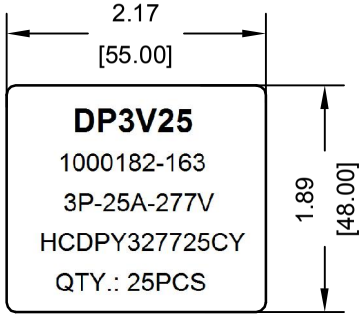

Master Carton Label

Product Label

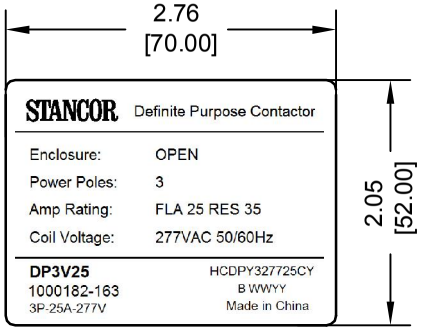

Individual Box Label

TOLERANCE	
INCHES [mm]	
X	±0.06 [1.50]
X.X	±0.02 [.50]
X.XX	±0.006 [.150]
X.XXX	±0.002 [.050]
ANGLES	±1°

THIRD ANGLE PROJECTION

REV.	DESCRIPTION	ECN	DWN	APVD	APVD DATE

STANCOR
www.stancor.com
2425 South 21st Street
Phoenix，AZ 85034
(602)275-3800

DRAWN BY	DRAWN DATE	CHECKED BY	CHECKED DATE

DESC. 3P-25A-277V

PAGE 1 OF 1

PART NO. DP3V25