NHD-2.8-240320AF-CSXP-FCTP

IPS TFT Liquid Crystal Display Module

NHD-	Newhaven Display
2.8-	2.8” Diagonal
240320-	240 x 320 Pixels (Portrait Mode)
AF-	Model
C-	Built-in Controller
S-	High Brightness White LED Backlight
X-	TFT
P-	IPS, Wide Temperature
FCTP-	FFC ZIF Connection Style, Capacitive Touch Panel with controller

Newhaven Display International, Inc.

2661 Galvin Ct.

Elgin IL, 60124

Ph: 847-844-8795 Fax: 847-844-8796

www.newhavendisplay.com

nhtech@newhavendisplay.com nhsales@newhavendisplay.com

Document Revision History

Revision	Date	Description	Changed by
-	4/9/19	Initial Release	PK

Functions and Features

- **240 x 320 pixels**
- **IPS type, full viewing angles**
- **High brightness LED backlight**
- **3.0V power supply**
- **8-bit or 16-bit Parallel MPU interface**
- **FFC ZIF I/O connection**
- **Built-in ST7789Vi controller**
- **262K colors**
- **Capacitive touch panel with controller**
    - **5-point multi-touch input**
    - **Gesture input**
        - **Zoom In/Out**
        - **Swipe Up/Down/Left/Right**

SYMBOL	REVISION	DATE

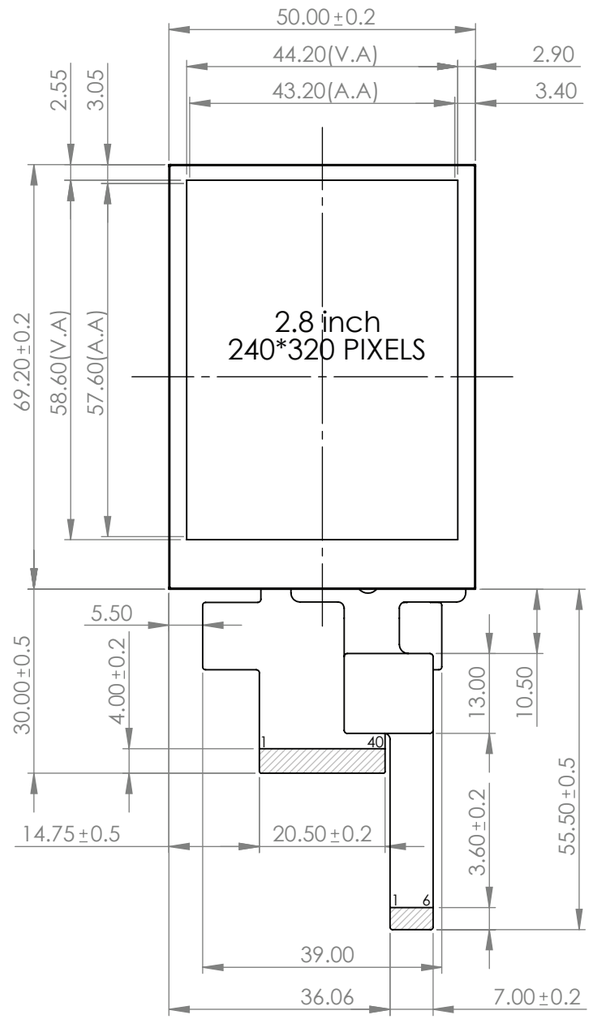

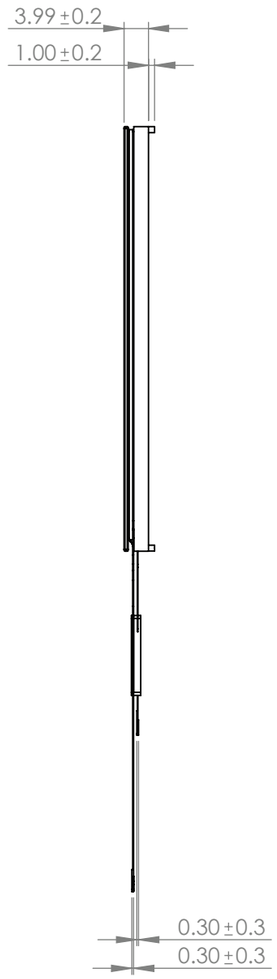

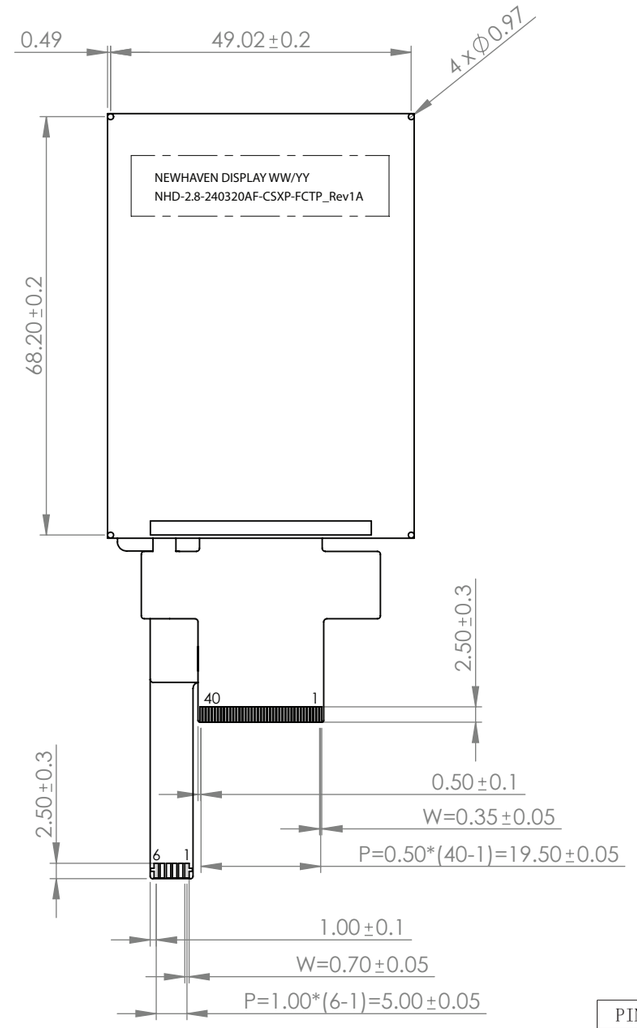

Pin Definitions

PIN No.	SYMBOL
1	GND
2	NC
3	NC
4	NC
5	NC
6	NC
7	VDD
8	IOVDD
9	NC
10	/CS
11	D/C
12	/WR
13	/RD
14	DB0
15	DB1
16	DB2
17	DB3
18	DB4
19	DB5
20	DB6
21	DB7
22	DB8
23	DB9
24	DB10
25	DB11
26	DB12
27	DB13
28	DB14
29	DB15
30	/RES
31	IM0
32	NC
33	GND
34	LEDK1
35	LEDK2
36	LEDK3
37	LEDK4
38	LEDA
39	GND
40	NC

PIN	SYMBOL
PIN1	VDD
PIN2	GND
PIN3	SCL
PIN4	SDA
PIN5	INT
PIN6	RESET

1. Display Size: 2.8” TFT
2. Optimal View: Full View (IPS)
3. Display Mode: Transmissive / Normally Black / Anti-Glare
4. Driver IC: ST7789Vi: 8/16Bit Parallel Interface
5. Supply Voltage: 2.8V
6. Backlight: White LED / 100 mA (Typ) / 3.1V
7. Brightness: 500 cd/m² (Typ)
8. Film: 3M Brightness Enhancement
9. Touch Panel: PCAP

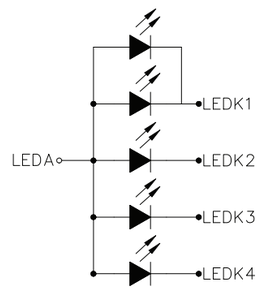

STANDARD TOLERANCE: (UNLESS OTHERWISE SPECIFIED)
LINEAR: ±0.3mm

NEWHAVEN DISPLAY INTERNATIONAL

DRAWING/PART NUMBER: NHD-2.8-240320AF-CSXP-FCTP
REVISION: 1.0
SIZE: A3
SCALE: 1:1

UNLESS OTHERWISE SPECIFIED:
- DIMENSIONS ARE IN MILLIMETERS
- THIRD ANGLE PROJECTION

DRAWN BY: P. Bartek
DRAWN DATE: 03/21/19
APPROVED BY: M. LaVine
APPROVED DATE: 03/21/19

DO NOT SCALE DRAWING
SHEET 1 OF 1

THIS DRAWING IS SOLELY THE PROPERTY OF NEWHAVEN DISPLAY INTERNATIONAL, INC. THE INFORMATION IT CONTAINS IS NOT TO BE DISCLOSED, REPRODUCED OR COPIED IN WHOLE OR PART WITHOUT WRITTEN APPROVAL FROM NEWHAVEN DISPLAY.

Pin Description

TFT:

Pin No.	Symbol	External Connection	Function Description
1	GND	Power Supply	Ground
2 - 6	NC	-	No Connect
7	V_{DD}	Power Supply	Supply Voltage for LCD (2.8V)
8	IOV_{DD}	Power Supply	Supply Voltage for Logic (Tie to V_{DD})
9	NC	-	No Connect
10	/CS	MPU	Active LOW Chip Select signal (can tie to GND)
11	D/C	MPU	Data / Command selection: '1' = Data ; '0' = Command
12	/WR	MPU	Active LOW Write signal
13	/RD	MPU	Active LOW Read signal
14 - 29	DB0 – DB15	MPU	Bi-directional data bus, 8-bit:DB8-DB15, 16-bit: DB0-DB15
30	/RES	MPU	Active LOW Reset signal
31	IM0	MPU	IM0=0: 16-bit i80 IM0=1: 8-bit i80
32	NC	-	No Connect
33	GND	Power Supply	Ground
34 - 37	LED-K1 – LED-K4	Power Supply	Backlight Cathode (Ground)
38	LED-A	Power Supply	Backlight Anode (100mA @ 3.1V)
39	GND	Power Supply	Ground
40	NC	-	No Connect

Recommended LCD connector: 40-pin, 0.5mm pitch FFC connector **Molex P/N**: 54132-4062 or similar

Capacitive Touch Panel:

Pin No.	Symbol	External Connection	Function Description
1	V_{DD}	Power Supply	Supply voltage for Logic (3.3V)
2	V_{SS}	Power Supply	Ground
3	SCL	MPU	Serial I2C Clock (Requires pull-up resistor)
4	SDA	MPU	Serial I2C Data (Requires pull-up resistor)
5	/INT	MPU	Interrupt signal from touch panel module to host
6	/RESET	MPU	Active LOW Reset signal

Recommended connector: 6pin, 1.0mm pitch, FFC connector. Molex P/N 52271-0679

Wiring Diagram

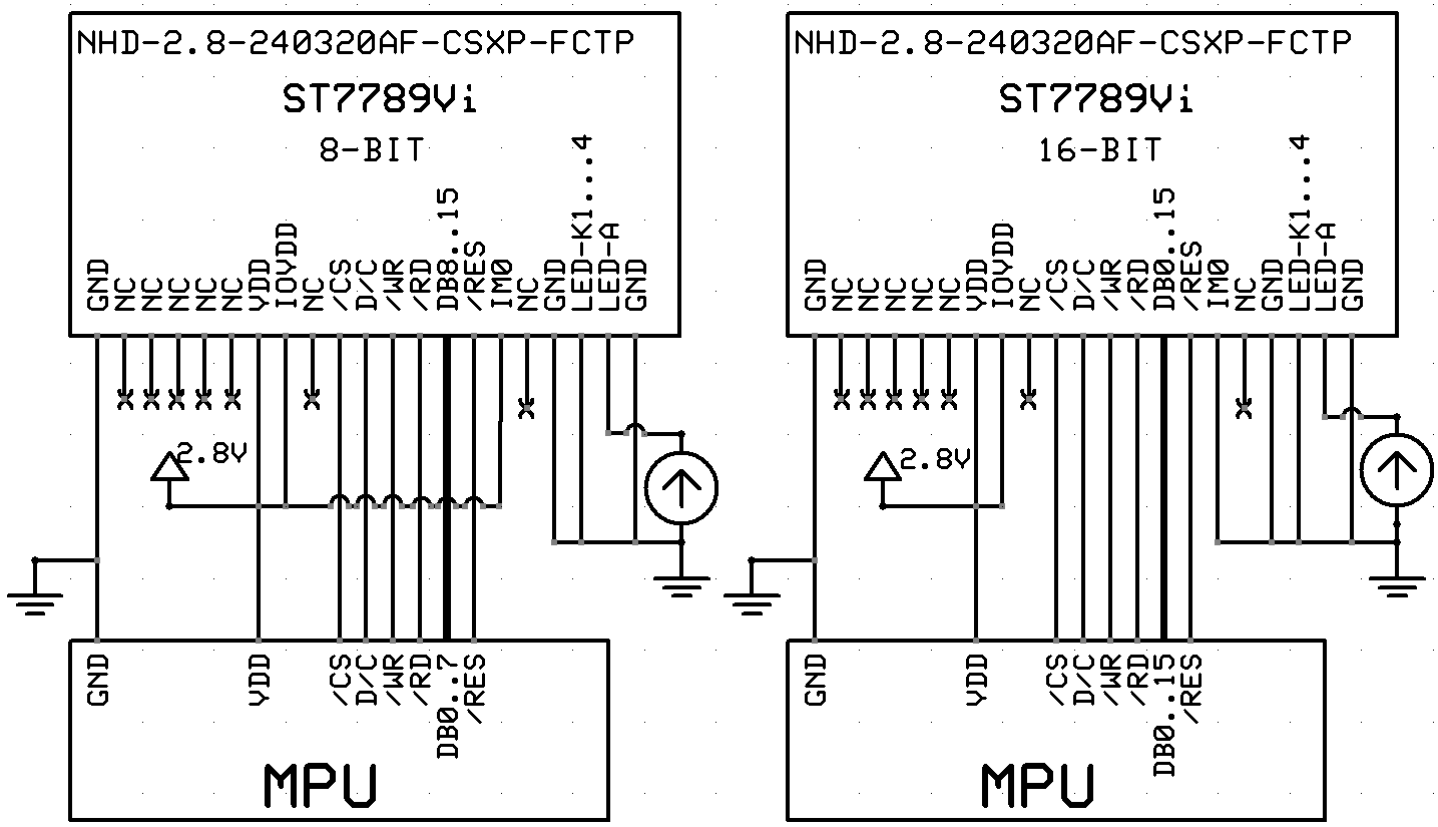

Electrical Characteristics

TFT:

Item	Symbol	Condition	Min.	Typ.	Max.	Unit
Operating Temperature Range	T_{OP}	Absolute Max	-20	-	+70	^oC
Storage Temperature Range	T_{ST}	Absolute Max	-30	-	+80	^oC
Supply Voltage for LCD	V_{DD}	-	2.6	2.8	3.3	V
Supply Voltage for Logic	IOV_{DD}	-	1.65	1.8	3.3	V
Supply Current	I_{DD}	V_{DD} = 2.8	3	9	15	mA
"H" Level input	V_{IH}	-	0.7 * V_{DD}	-	V_{DD}	V
"L" Level input	V_{IL}	-	GND	-	0.3 * V_{DD}	V
"H" Level output	V_{OH}	-	0.8 * V_{DD}	-	V_{DD}	V
"L" Level output	V_{OL}	-	GND	-	0.2 * V_{DD}	V
Backlight Supply Current	I_{LED}	-	80	100	125	mA
Backlight Supply Voltage	V_{LED}	I_{LED} = 100 mA	2.8	3.1	3.4	V
Backlight Lifetime*	-	I_{LED} = 100mA T_{OP} = 25°C	20,000	50,000	-	Hrs.

*Backlight Lifetime is rated as Hours until **half-brightness**, under normal operating conditions. The LED of the backlight is driven by current drain; drive voltage is for reference only. Drive voltage must be selected to ensure backlight current drain is below MAX level stated.

Capacitive Touch Panel:

Item	Symbol	Condition	Min.	Typ.	Max.	Unit
Operating Temperature Range	T_{OP}	Absolute Max	-20	-	+70	^oC
Storage Temperature Range	T_{ST}	Absolute Max	-30	-	+80	^oC
Supply Voltage	V_{DD}	-	2.8	3.3	3.3	V
Supply Current – Operating	I_{DD}	V_{DD} = 3.3V	5.75	11.50	23	mA
Supply Current – Sleep	I_{DD}	V_{DD} = 3.3V	25	50	100	µA
"H" Level input	V_{IH}	-	0.7*V_{DD}	-	V_{DD}	V
"L" Level input	V_{IL}	-	V_{SS}	-	0.3*V_{DD}	V
"H" Level output	V_{OH}	-	0.7*V_{DD}	-	V_{DD}	V
"L" Level output	V_{OL}	-	V_{SS}	-	0.3*V_{DD}	V

Optical Characteristics

Item		Symbol	Condition	Min.	Typ.	Max.	Unit
Optimal Viewing Angles	Top	φY+	CR ≥ 10	-	80	-	^{o}
	Bottom	φY-		-	80	-	^{o}
	Left	θX-		-	80	-	^{o}
	Right	θX-		-	80	-	^{o}
Contrast Ratio		CR	-	600	800	-	-
Luminance		L_V	I_{LED} = 100 mA	410	500	-	cd/m^2
Response Time		$T_R + T_F$	T_{OP} = 25°C	-	30	40	Ms
Chromaticity	Red	X_R	-	0.590	0.630	0.670	-
		Y_R	-	0.296	0.336	0.376	-
	Green	X_G	-	0.267	0.607	0.347	-
		Y_G	-	0.563	0.603	0.643	-
	Blue	X_B	-	0.107	0.147	0.187	-
		Y_G	-	0.012	0.052	0.092	-
	White	X_W	-	0.249	0.289	0.329	-
		Y_W	-	0.270	0.310	0.350	-

Capacitive Touch Panel Material Characteristics:

Property	Requirement	Unit
IC	FT5426	-
ITO Glass thickness	0.55	mm
Surface Hardness	≥6	H
Light transmission	85%	-
Operating Humidity	20~90	RH
Storage Humidity	20~90	RH

Controller Information

TFT Display:
Built-in ST7789Vi controller.
Please download specification at http://www.newhavendisplay.com/appnotes/datasheets/LCDs/ST7789V.pdf

Capacitive Touch Panel:
Built-in FT5426 controller.
Please download specification at https://www.newhavendisplay.com/appnotes/datasheets/touchpanel/FT5x26.pdf
Please download app notes at FT5x26 App Notes

TFT Table of Commands

Please download specification at http://www.newhavendisplay.com/appnotes/datasheets/LCDs/ST7789V.pdf

Capacitive Touch Panel Registers

Register No.	Access	Register Name	Bits	Value	Description
01h	RO	Gesture ID	[7:0]	10 18h 1Ch 14h 48h 49h 00	Swipe Up Swipe Down Swipe Left Swipe Right Zoom Out Zoom In No gesture
02h	RO	Touch Points	[7:0]	0-5h	0: No touch detected A: 5 touch points detected
03h	RO	TOUCH1_Event_Flag	[7:6]	0 1 2 3	Put Down Put Up Contact Reserved
03h	RO	TOUCH1_XH	[3:0]	0 -1	Upper 4 bits of X touch coordinate
04h	RO	TOUCH1_XL	[7:0]	00 - FFh	Lower 8 bits of X touch coordinate
05h	RO	TOUCH1_YH	[3:0]	0 -1	Upper 4 bits of Y touch coordinate
06h	RO	TOUCH1_YL	[7:0]	00 - FFh	Lower 8 bits of Y touch coordinate
07h	RO	TOUCH1_Weight	[7:0]		Touch Weight
08h	RO	TOUCH1_Misc	[3:0]	00-0Fh	Touch Area
09h	RO	TOUCH2_Event_Flag	[7:6]	0 1 2 3	Put Down Put Up Contact Reserved

09h	RO	TOUCH1_XH	[3:0]	0 -1	Upper 4 bits of X touch coordinate
0Ah	RO	TOUCH2_XL	[7:0]	00 - FFh	Lower 8 bits of X touch coordinate
0Bh	RO	TOUCH2_YH	[3:0]	0 -1	Upper 4 bits of Y touch coordinate
0Ch	RO	TOUCH2_YL	[7:0]	00 - FFh	Lower 8 bits of Y touch coordinate
0Dh	RO	TOUCH2_Weight	[7:0]		Touch Weight
0Eh	RO	TOUCH2_Misc	[3:0]	00-0Fh	Touch Area
0Fh	RO	TOUCH3_Event_Flag	[7:6]	0 1 2 3	Put Down Put Up Contact Reserved
0Fh	RO	TOUCH3_XH	[3:0]	0 -1	Upper 4 bits of X touch coordinate
10	RO	TOUCH3_XL	[7:0]	00 - FFh	Lower 8 bits of X touch coordinate
11h	RO	TOUCH3_YH	[3:0]	0 -1	Upper 4 bits of Y touch coordinate
12h	RO	TOUCH3_YL	[7:0]	00 - FFh	Lower 8 bits of Y touch coordinate
13h	RO	TOUCH3_Weight	[7:0]		Touch Weight
14h	RO	TOUCH3_Misc	[3:0]	00-0Fh	Touch Area
15h	RO	TOUCH4_Event_Flag	[7:6]	0 1 2 3	Put Down Put Up Contact Reserved
15h	RO	TOUCH4_XH	[3:0]	0 -1	Upper 4 bits of X touch coordinate
16h	RO	TOUCH4_XL	[7:0]	00 - FFh	Lower 8 bits of X touch coordinate
17h	RO	TOUCH4_YH	[3:0]	0 -1	Upper 4 bits of Y touch coordinate
18h	RO	TOUCH4_YL	[7:0]	00 - FFh	Lower 8 bits of Y touch coordinate
1Ah	RO	TOUCH4_Misc	[3:0]	00-0Fh	Touch Area
1Bh	RO	TOUCH5_Event_Flag	[7:6]	0 1 2 3	Put Down Put Up Contact Reserved
1Bh	RO	TOUCH5_XH	[3:0]	0 -1	Upper 4 bits of X touch coordinate
1Ch	RO	TOUCH5_XL	[7:0]	00 - FFh	Lower 8 bits of X touch coordinate
1Dh	RO	TOUCH5_YH	[3:0]	0 -1	Upper 4 bits of Y touch coordinate
1Eh	RO	TOUCH5_YL	[7:0]	00 - FFh	Lower 8 bits of Y touch coordinate
1Fh	RO	TOUCH5_Weight	[7:0]		Touch Weight
20**h**	RO	TOUCH5_Misc	[3:0]	00-0Fh	Touch Area
80h	RW	ID_G_MC_THGROUP	[7:0]	00-FFh	Mutual-Capacitive touch Threshold / 4 Default: 4Bh
81h	RW	ID_G_MC_THPEAK	[7:0]	00-FFh	Mutual-Capacitive Peak Threshold / 4 Default: 46h
85h	RW	ID_G_THDIFF	[7:0]	00-FFh	Points Filtering Range Threshold / 16 Default: A0
86h	RW	ID_G_CTRL	[1:0]	0-1	Allowed to switch to monitor mode or not (1: Allowed, 0: Not Allowed)
88h	RW	ID_G_PERIODACTIVE	[3:0]	3h-Eh	Period of Active Status
89h	RW	ID_G_PERIODMONITOR	[7:0]	1Eh-FFh	Timer to enter “idle” while in Monitor (ms)
A1h	RO	ID_G_LIB_VERSION_H	[7:0]	00-FFh	App library version high-byte Default: 0
A2h	RO	ID_G_LIB_VERSION_L	[7:0]	00-FFh	App library version low-byte Default: 2h
A3h	RO	ID_G_CHIPER_HIGH	[7:0]	00-FFh	Chip Vendor ID Default: 54h
A4h	RW	ID_G_MODE	[0]	0 1	INT Trigger Mode INT Polling Mode

Register No.	Access	Register Name	Bits	Value	Description
A5h	RW	ID_G_PMODE	[1:0]	0 1 3	Active Monitor Sleep
A6h	RO	ID_G_FIRMID	[7:0]	00-FFh	Firmware ID Number Default: 2
A8h	RO	ID_G_VENODRID	[7:0]	00-FFh	CTPM Vendor's Chip ID Default: 79h
C0h	RW	ID_G_GLOVE_MODE_EN	[0]	0 1	Glove Mode Switch Disable Glove Mode Switch Enable
C1h	RW	ID_G_COVER_MODE_EN	[0]	0 1	Cover Mode Switch Disable Cover Mode Switch Enable

Timing Characteristics

Parallel 18/16/9/8-bit Interface Timing Characteristics (8080-II system)

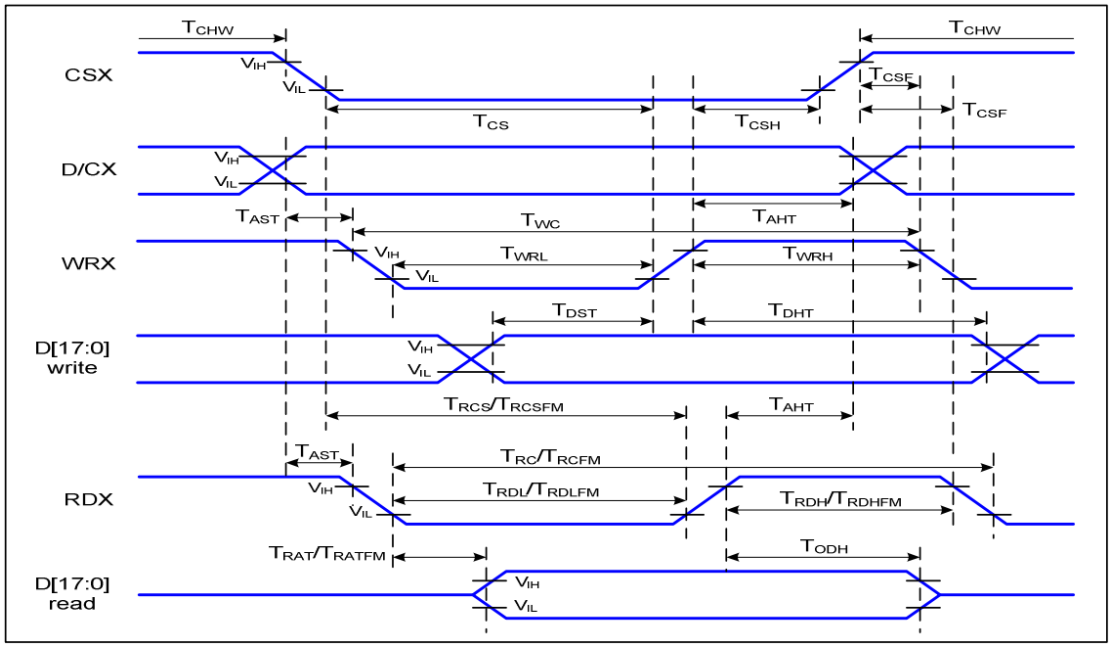

Signal	Symbol	Parameter	Min	Max	Unit	Description
D/CX	T_{AST}	Address setup time	0		ns	-
	T_{AHT}	Address hold time (Write/Read)	10		ns	
CSX	T_{CHW}	Chip select "H" pulse width	0		ns	-
	T_{CS}	Chip select setup time (Write)	15		ns	
	T_{RCS}	Chip select setup time (Read ID)	45		ns	
	T_{RCSFM}	Chip select setup time (Read FM)	355		ns	
	T_{CSF}	Chip select wait time (Write/Read)	10		ns	
	T_{CSH}	Chip select hold time	10		ns	
WRX	T_{WC}	Write cycle	66		ns	
	T_{WRH}	Control pulse "H" duration	15		ns	
	T_{WRL}	Control pulse "L" duration	15		ns	
RDX (ID)	T_{RC}	Read cycle (ID)	160		ns	When read ID data
	T_{RDH}	Control pulse "H" duration (ID)	90		ns	
	T_{RDL}	Control pulse "L" duration (ID)	45		ns	
RDX (FM)	T_{RCFM}	Read cycle (FM)	450		ns	When read from frame memory
	T_{RDHFM}	Control pulse "H" duration (FM)	90		ns	
	T_{RDLFM}	Control pulse "L" duration (FM)	355		ns	
D[17:0]	T_{DST}	Data setup time	10		ns	For CL=30pF
	T_{DHT}	Data hold time	10		ns	
	T_{RAT}	Read access time (ID)		40	ns	
	T_{RATFM}	Read access time (FM)		340	ns	
	T_{ODH}	Output disable time	20	80	ns	

Reset Timing

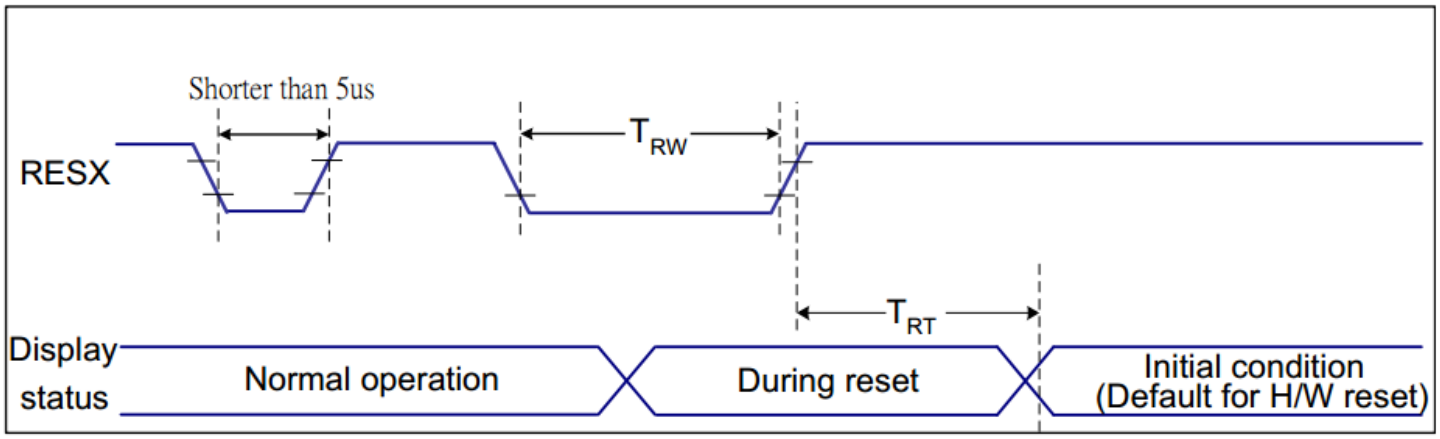

Related Pins	Symbol	Parameter	MIN	MAX	Unit
RESX	TRW	Reset pulse duration	10	-	us
	TRT	Reset cancel	-	5 (Note 1, 5)	ms
				120 (Note 1, 6, 7)	ms

Power ON/OFF Sequence

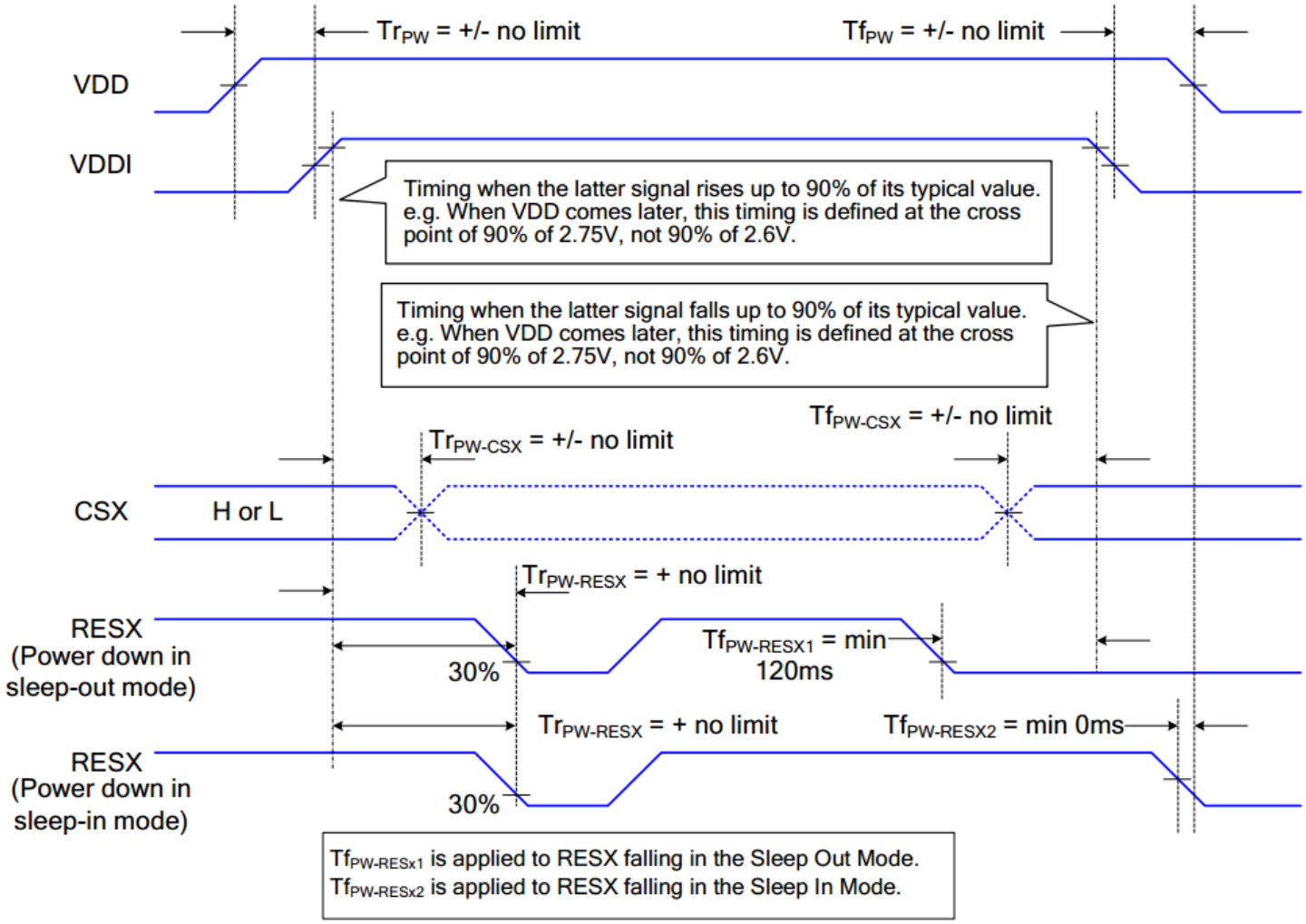

Example Initialization Code

```
/*****************************************************************************/
void TFT_28_7789_Write_Command(unsigned int command)
{
GPIO_ResetBits(GPIOC, CS1);
GPIO_ResetBits(GPIOC, RS);
GPIO_SetBits(GPIOC, nRD);
GPIO_ResetBits(GPIOC, nWR);
GPIO_Write(GPIOB, command);
TFT_delay(10);
GPIO_SetBits(GPIOC, nWR);
TFT_delay(1);
}
/*****************************************************************************/
void TFT_28_7789_Write_Data(unsigned int data1)
{
GPIO_Write(GPIOB, data1);
GPIO_SetBits(GPIOC, RS);
GPIO_ResetBits(GPIOC, nWR);
TFT_delay(1);
GPIO_SetBits(GPIOC, nWR);
}
/*****************************************************************************/
void TFT_28_7789_Init(void)
{
int n;
GPIO_ResetBits(GPIOC, CS1);
GPIO_SetBits(GPIOC, nRD);
GPIO_ResetBits(GPIOC, nWR);
GPIO_WriteBit(GPIOC, RES, Bit_RESET);
TFT_delay(100);
GPIO_WriteBit(GPIOC, RES, Bit_SET);
TFT_delay(100);
TFT_28_7789_Write_Command(0x0011);//exit SLEEP mode
TFT_delay(100);

TFT_28_7789_Write_Command(0x0036);
TFT_28_7789_Write_Data(0x0080);//MADCTL: memory data access control
TFT_28_7789_Write_Command(0x003A);
TFT_28_7789_Write_Data(0x0066);//COLMOD: Interface Pixel format
TFT_28_7789_Write_Command(0x0021);//INVON: Display Inversion ON (setting for IPS)
TFT_28_7789_Write_Command(0x00B2);
TFT_28_7789_Write_Data(0x000C);
TFT_28_7789_Write_Data(0x0C);
TFT_28_7789_Write_Data(0x00);
TFT_28_7789_Write_Data(0x33);
TFT_28_7789_Write_Data(0x33);//PORCTRK: Porch setting
TFT_28_7789_Write_Command(0x00B7);
TFT_28_7789_Write_Data(0x0035);//GCTRL: Gate Control
TFT_28_7789_Write_Command(0x00BB);
TFT_28_7789_Write_Data(0x002B);//VCOMS: VCOM setting
TFT_28_7789_Write_Command(0x00C0);
TFT_28_7789_Write_Data(0x002C);//LCMCTRL: LCM Control
TFT_28_7789_Write_Command(0x00C2);
TFT_28_7789_Write_Data(0x0001);
TFT_28_7789_Write_Data(0xFF);//VDVVRHEN: VDV and VRH Command Enable
TFT_28_7789_Write_Command(0x00C3);
TFT_28_7789_Write_Data(0x0011);//VRHS: VRH Set
```

```
TFT_28_7789_Write_Command(0x00C4);
TFT_28_7789_Write_Data(0x0020);//VDVS: VDV Set
TFT_28_7789_Write_Command(0x00C6);
TFT_28_7789_Write_Data(0x000F);//FRCTRL2: Frame Rate control in normal mode
TFT_28_7789_Write_Command(0x00D0);
TFT_28_7789_Write_Data(0x00A4);
TFT_28_7789_Write_Data(0xA1);//PWCTRL1: Power Control 1
TFT_28_7789_Write_Command(0x00E0);
TFT_28_7789_Write_Data(0x00D0);
TFT_28_7789_Write_Data(0x0000);
TFT_28_7789_Write_Data(0x0005);
TFT_28_7789_Write_Data(0x000E);
TFT_28_7789_Write_Data(0x0015);
TFT_28_7789_Write_Data(0x000D);
TFT_28_7789_Write_Data(0x0037);
TFT_28_7789_Write_Data(0x0043);
TFT_28_7789_Write_Data(0x0047);
TFT_28_7789_Write_Data(0x0009);
TFT_28_7789_Write_Data(0x0015);
TFT_28_7789_Write_Data(0x0012);
TFT_28_7789_Write_Data(0x0016);
TFT_28_7789_Write_Data(0x0019);//PVGAMCTRL: Positive Voltage Gamma control
TFT_28_7789_Write_Command(0x00E1);
TFT_28_7789_Write_Data(0x00D0);
TFT_28_7789_Write_Data(0x0000);
TFT_28_7789_Write_Data(0x0005);
TFT_28_7789_Write_Data(0x000D);
TFT_28_7789_Write_Data(0x000C);
TFT_28_7789_Write_Data(0x0006);
TFT_28_7789_Write_Data(0x002D);
TFT_28_7789_Write_Data(0x0044);
TFT_28_7789_Write_Data(0x0040);
TFT_28_7789_Write_Data(0x000E);
TFT_28_7789_Write_Data(0x001C);
TFT_28_7789_Write_Data(0x0018);
TFT_28_7789_Write_Data(0x0016);
TFT_28_7789_Write_Data(0x0019);//NVGAMCTRL: Negative Voltage Gamma control
TFT_28_7789_Write_Command(0x002A);
TFT_28_7789_Write_Data(0x0000);
TFT_28_7789_Write_Data(0x0000);
TFT_28_7789_Write_Data(0x0000);
TFT_28_7789_Write_Data(0x00EF);//X address set
TFT_28_7789_Write_Command(0x002B);
TFT_28_7789_Write_Data(0x0000);
TFT_28_7789_Write_Data(0x0000);
TFT_28_7789_Write_Data(0x0001);
TFT_28_7789_Write_Data(0x003F);//Y address set

TFT_delay(10);
}
/*****************************************************************************/
```

Quality Information

Test Item	Content of Test	Test Condition	Note
High Temperature Storage	Endurance test applying the high storage temperature for a long time.	+80°C, 240hrs	2
Low Temperature Storage	Endurance test applying the low storage temperature for a long time.	-30°C, 240hrs	1,2
High Temperature Operation	Endurance test applying the electric stress (voltage & current) and the high thermal stress for a long time.	+70°C, 120hrs	2
Low Temperature Operation	Endurance test applying the electric stress (voltage & current) and the low thermal stress for a long time.	-20°C, 120hrs	1,2
High Temperature / Humidity Operation	Endurance test applying the electric stress (voltage & current) and the high thermal with high humidity stress for a long time.	+50°C, 90-95% RH, 120hrs	1,2
Thermal Shock resistance	Endurance test applying the electric stress (voltage & current) during a cycle of low and high thermal stress.	-20°C 30min -> 25°C 5min -> 70°C 30min -> 25°C 5min = 1 cycle. For 10 cycles	
Vibration test	Endurance test applying vibration to simulate transportation and use.	10Hz-55Hz, 1.5mm amplitude. 2hrs in each of 3 directions X,Y,Z	3
Static electricity test	Endurance test applying electric static discharge.	Air discharge: ±8KV 10 Times Contact discharge: ±4kv 10 Times	

Note 1: No condensation to be observed.
Note 2: Conducted after 4 hours of storage at 25°C, 0%RH.
Note 3: Test performed on product itself, not inside a container.

Precautions for using LCDs/LCMs

See Precautions at www.newhavendisplay.com/specs/precautions.pdf

Warranty Information

See Terms & Conditions at http://www.newhavendisplay.com/index.php?main_page=terms